A Nest-Box Plan for American Kestrels and Screech-Owls

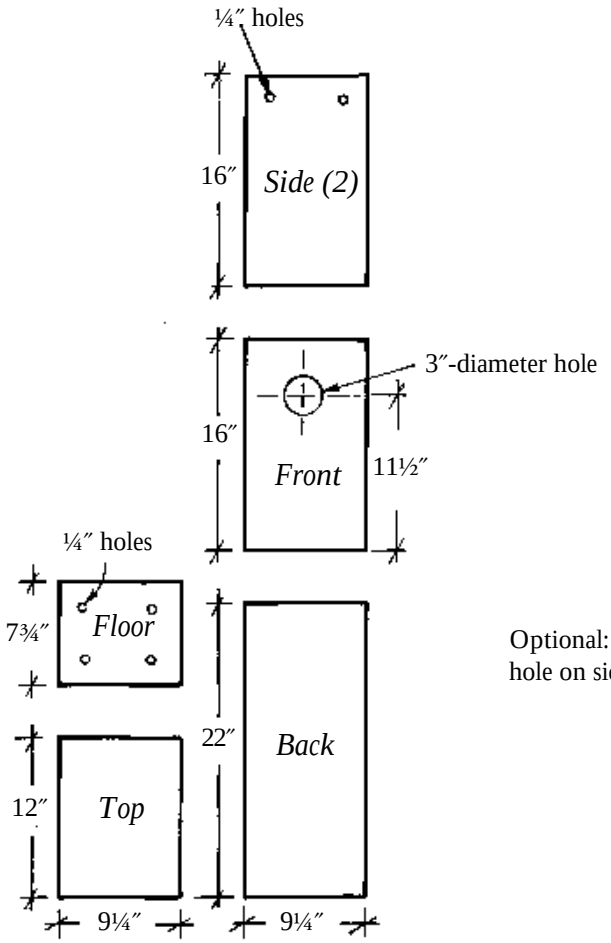

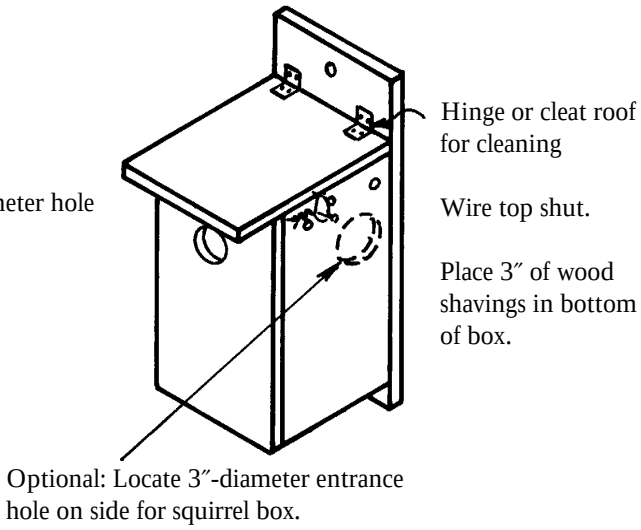

Lumber: One 1″ × 10″ × 8′0″

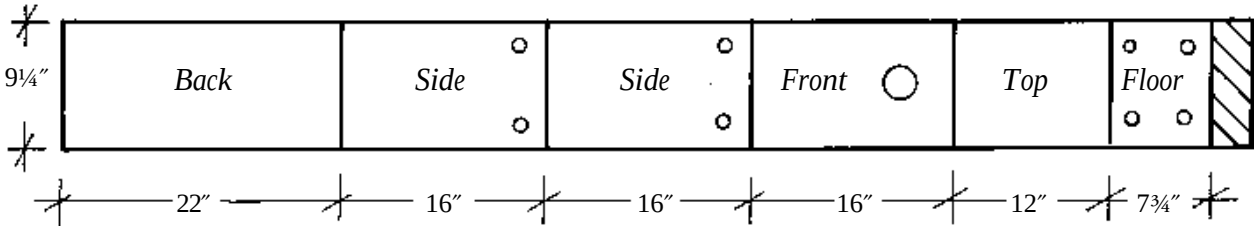

Printed with permission from *Woodworking for Wildlife* (Henderson 1992)